	LATEST CHECKED	DRAWN	-	CHECKED 3	-	CHECKED 2	-	CHECKED 1	-	APPROVED	-

Surface roughness(Ra)
(12.5a, equivalent to) 50 Z
(3.2a, equivalent to) 12.5Z
(1.6a, equivalent to) 3.2Z
(0.2a, equivalent to) 0.8Z
Grade of screw thread : JIS Grade 2

Revision

	Port name	Port size	On delivery	Tightening torque N·m (lbf·FT)
A	Delivery port	SAE J518C Std. pressure (code 61) 1"	Covered with tape	57 (42.0)
B	Suction port	SAE J518C Std. pressure (code 61) 1 1/2"	Covered with tape	98 (72.3)
D_r	Drain port	DIN 3852 M22x1.5	Attached with steel plug	98 (72.3)
P_L	Load sensing port (Type L0/1, L1/1)	DIN 3852 M14x1.5	Attached with steel plug	25 (18.4)
P_C	Pressure control port (Type P0/1)			
T_{air}	Air bleeder port		Attached with steel plug	25 (18.4)

Notes on mounting and operation

(1) The pump shaft and flange surfaces should be cleaned. Remove an anti-rust material.
(2) Do not apply any form of axial loading to the pump shaft.
(3) The uppermost drain port should be used and the drain piping should be so connected as to keep the casing filled with oil.
(4) Keep the casing pressure below 1 bar (14 psi) normally, and below 4 bar (58 psi) at its peak.
(5) Make sure the drain piping led into the oiltank is kept below the surface of the oil (to prevent airation).
(6) Make sure the suction pressure in the suction flange is kept above 0 bar (0 psi) normally.
(7) Mineral antiwear type hydraulic oil should be used.
(8) For satisfactory service life of the pump in application, the operating fluid should be continuously filtered to a minimum cleanliness level of NAS1638 class 9 or 18/15 to ISO/DIS 4406.
(9) Provide a 150 mesh (100μm) strainer in the suction line.
(10) Install a 10μm filter in the return line.
(11) Allowable oil temperature range : -20～95℃.
(12) Oil viscosity range : 10～1000cSt when 200～1000cSt, take warming up before real working.
(13) Caution for the vertical mounting.
The oil level in the tank should be upper than the pump mounting flange. (fig. 1)
If the oil level is lower than the pump level, forced lubrication should be made from the air bleeder port. (flow 1～2 l/min)
(a) Installation within a tank
① Open the drain port and the air bleeder port.
(b) Installation outside a tank (fig. 2)
① Pipe the drain port and the air bleeder port to tank.
② If the pipe for draining or air bleeding is upper than the oil level, it should be filled with oil before starting the pump.

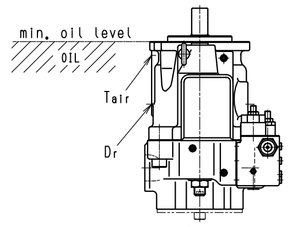

(fig. 1)

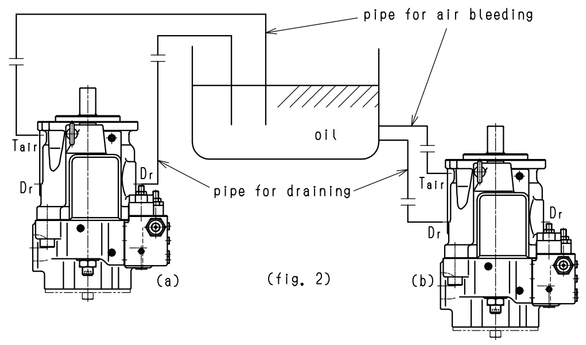

(fig. 2)

Operating specifications

Displacement	cm^3 (in^3)	45 (2.75)
Max. self priming speed	min^{-1}	2700 (Clockwise viewed from shaft end)
Rated pressure	bar (psi)	320 (4600)
Peak pressure	bar (psi)	350 (5000)
Pump model name		K3VL45/B-1$^{S}_{N}$RMM-$^{L0}_{P0}$ $^{}_{L1}$

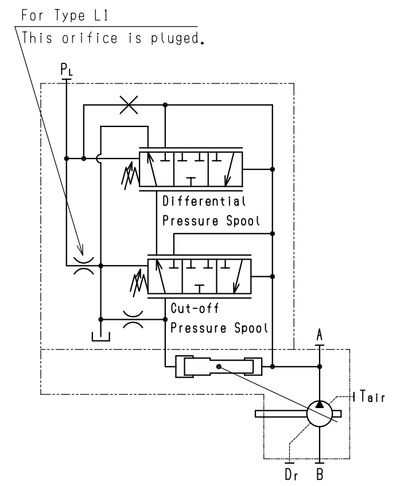

Hydraulic circuit (Type L0, L1)

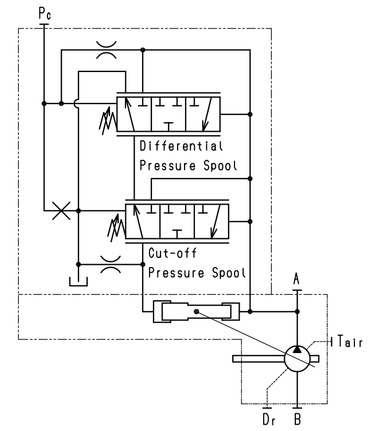

Hydraulic circuit (Type P0)

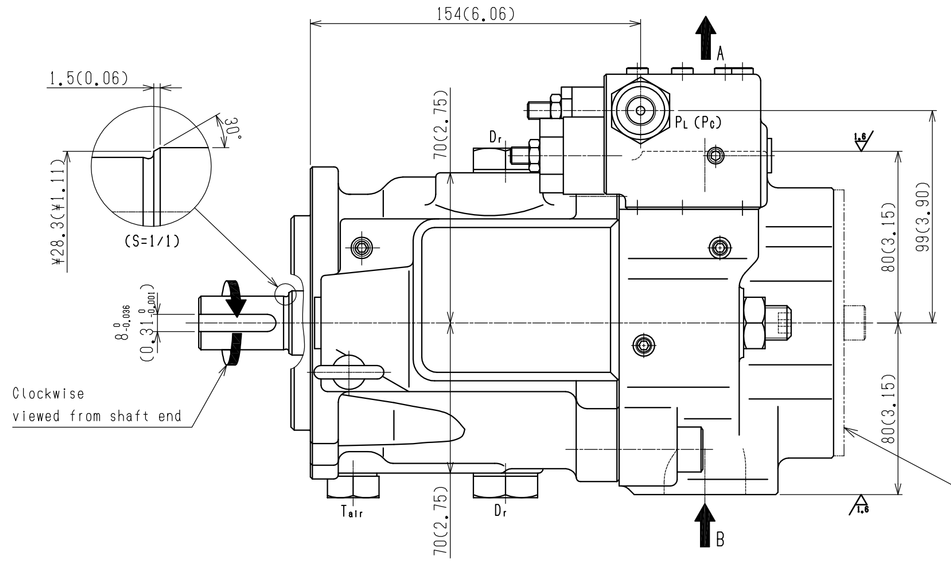

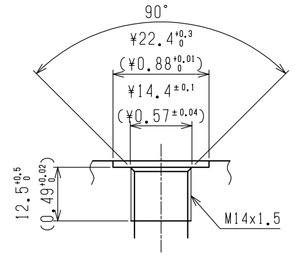

Detail of PL (Pc), Tair ports (1/1)

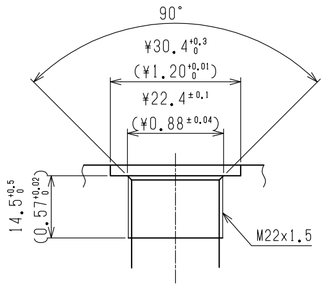

Detail of Dr ports (1/1)

Pump model name		K3VL45/B
Adjustable range of max. displacement	cm^3	16～45
L	mm	0.5～12.1

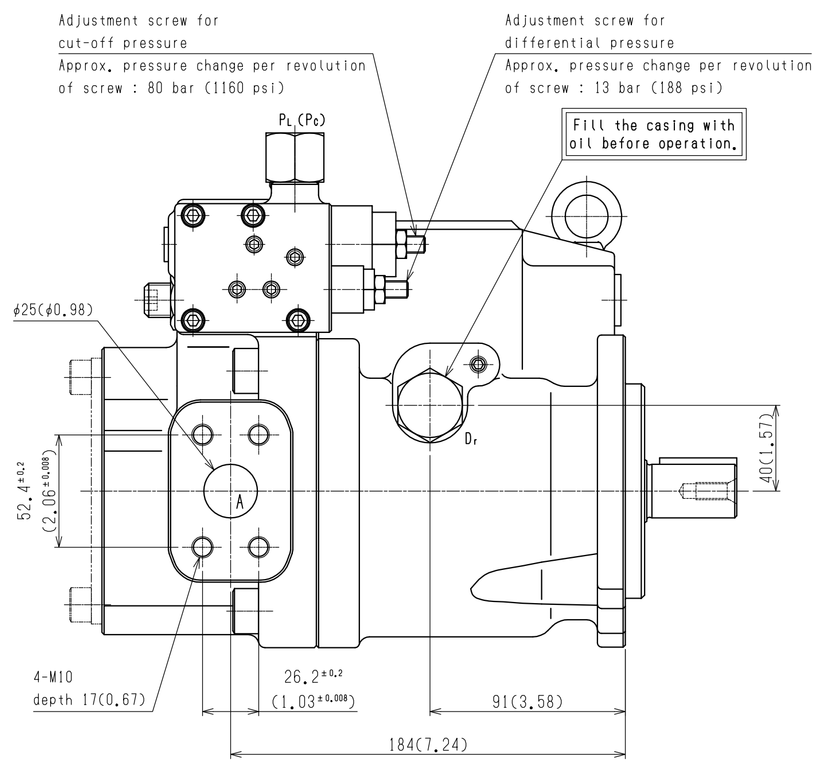

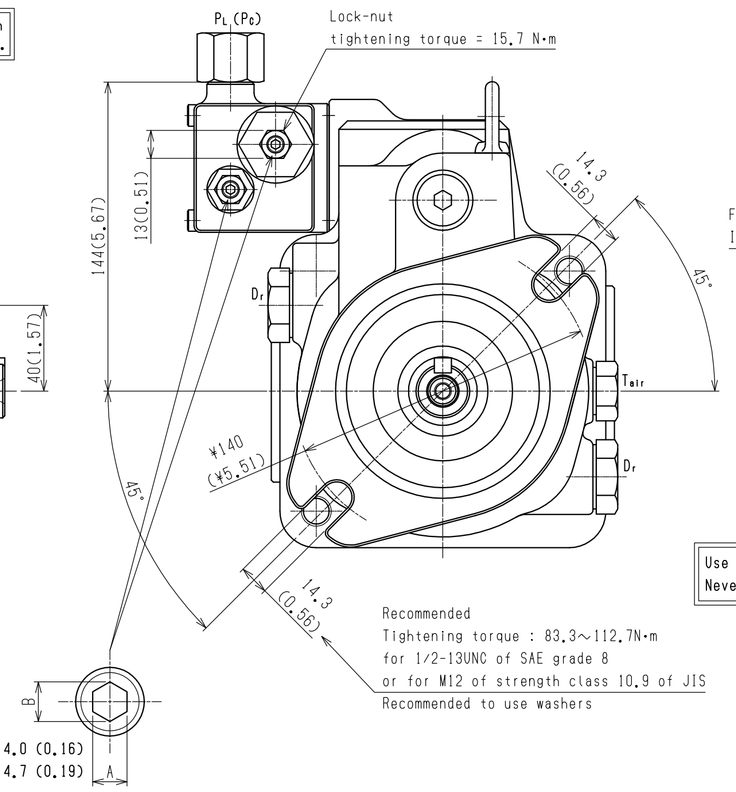

A : 4.0 (0.16)
B : 4.7 (0.19)

Detail of Adjustment screw (2/1)

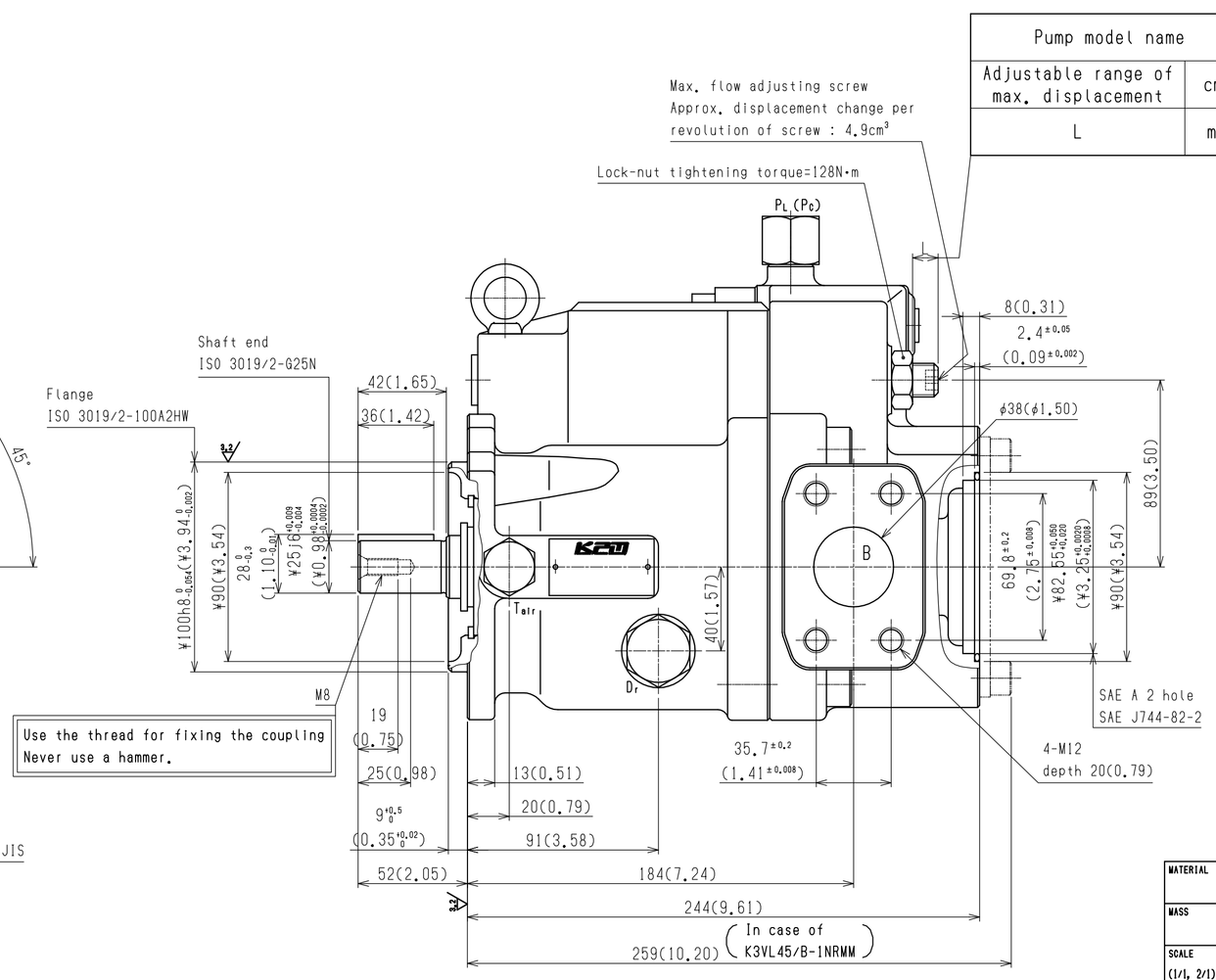

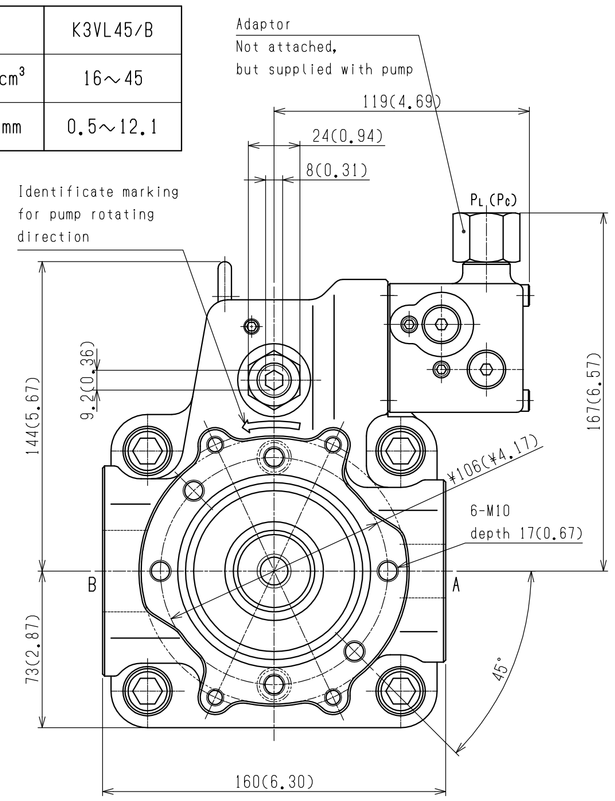

Dimensions are shown in milimeters in principle.
Figures in parenthesis are shown in inches.

MATERIAL	APPROVED M.Ohnishi	PRODUCT CODE	JOB NO.	RULE
MASS 30 kg	CHECKED 1 K.Watsuda	K3VL45/B-1 RMM- S/N LO/PO/L1		
SCALE (1/1, 2/1) 1/2	CHECKED 2 -			
3 RD ANGLE PROJECTION	CHECKED 3 I.Yoshimura	INSTALLATION DIMENSIONS		
DATE Aug.04,2005	DRAWN N.Yamamoto	PART NO.	DWG.NO. 02430-4657	

DELIVERY
SPARE
TOTAL

KPM Kawasaki Precision Machinery Ltd.

(A1)